REVISIONS			
REV.	DESCRIPTION	DATE	APPROVED
-	NEW RELEASE	-	
1	MOUNTING BRACKET WAS FABRICATED NOW PURCHASED. PLATE WASHERS WERE FABRICATED NOW PURCHASED.	4/16/2026	F. BRYANT

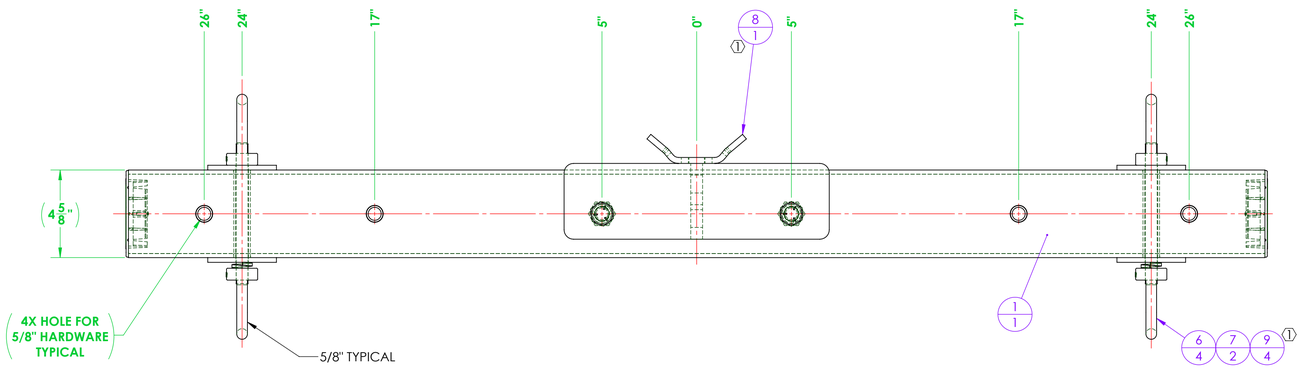

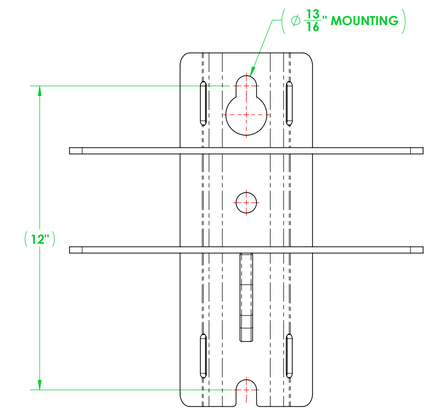

DETAIL A

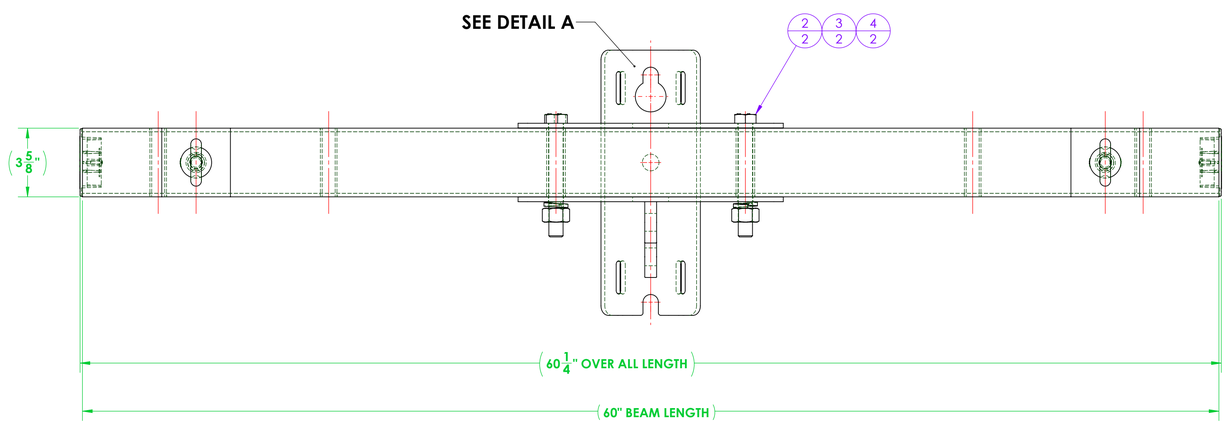

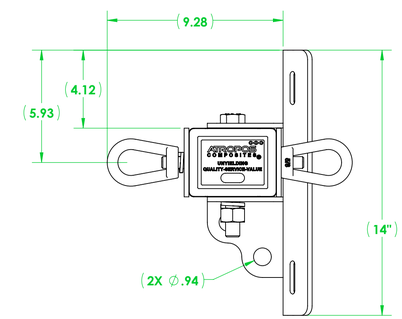

ITEM NO.	PART NUMBER	DESCRIPTION	QTY.
1	3401A060-D312-2909 CA	ASSEMBLY, 3401 DEADEND CROSSARM, 5'	1
2	A616-0020-02	BOLT, HEX, 3/4"-10 X 6.00" LONG, HOT DIPPED GALVANIZED STEEL, 1-1/8" DRIVE	2
3	A616-0042-01	LOCK WASHER, FOR 3/4" SCREW, 0.766" ID, 1.265" OD, 0.188" THICK, HOT-DIPPED GALVANIZED STEEL	2
4	A616-0019-02	EXTREME STRENGTH NUT, HEX, 3/4"-10, 2H, HOT-DIPPED GALVANIZED	2
5	A616-0042-02	LOCK WASHER, FOR 5/8" SCREW, 0.641" ID, 1.073" OD, 0.156" THICK, HOT-DIPPED GALVANIZED STEEL	2
6	A616-0017-02	EYENUT, 5/8"-11, GALVANIZED STEEL	4
7	A711-0044	ALL-THREAD, 5/8"-11 X 7.50" LONG, GALV. STEEL	2
① 8	A700-0044	CROSSARM MOUNTING BRACKET, DEADEND, 3400 SERIES	1
① 9	A700-0049	WASHER, SQUARE, 3.625" X 3.625" X 0.25 THICK WITH 0.66 THRU HOLE	4

GENERAL NOTES

UNLESS OTHERWISE SPECIFIED		NAME	DATE
DIMENSIONS ARE IN INCHES			
STANDARD TOLERANCES	DRAWN	F. BRYANT	10/15/2025
FRACTIONAL: ±1/32	CHECKED	TJS	10/21/2025
ANGULAR: MACHINED ±0.5° BEND: ±2°	ENG APPR.		
TWO PLACE DECIMAL: ±0.03	MFG APPR.		
THREE PLACE DECIMAL: ±0.005	Q.A.		
INTERPRET GEOMETRIC TOLERANCING PER: ANSI Y14.5			
MATERIAL -			
FINISH -			
DO NOT SCALE DRAWING			

PROPRIETARY AND CONFIDENTIAL

THE INFORMATION CONTAINED IN THIS DRAWING IS THE SOLE PROPERTY OF VELTURIS. ANY REPRODUCTION IN PART OR AS A WHOLE WITHOUT THE WRITTEN PERMISSION OF VELTURIS IS PROHIBITED.

ATROPOS COMPOSITES
12208 MISSOURI BOTTOM ROAD, HAZELWOOD, MO 63042
PHONE: 314.714.4001 FAX: 314.895.1943
SALES@LABYRINTH-TECH.COM

TITLE:
ASSEMBLY, DEADEND, 3401, (2) WIRE, 5 FT.

SIZE	DWG. NO.	REV
D	3401A060-D312-2909	1

SCALE: 1:8 | WEIGHT: 48.93 | SHEET 1 OF 1